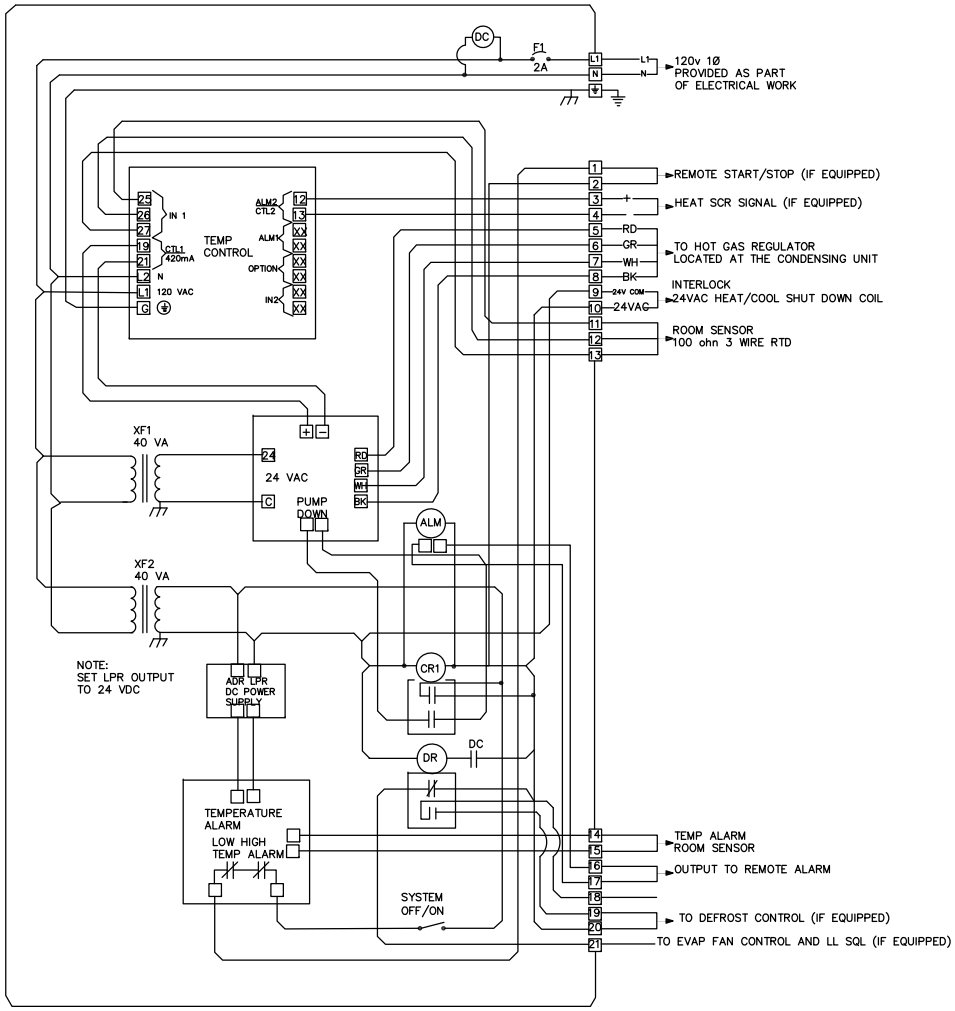

PANEL WIRING SCHEMATIC

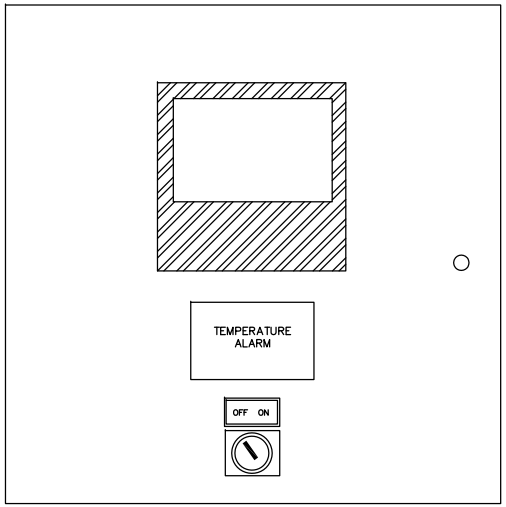

FRONT PANEL LAYOUT

CONTROL COMPONENTS			
TAG	QTY	PART NUMBER	DESCRIPTION
ENCLOSURE	1		20X16X8NEMA4ENCLOSURE
BACKPLATE	1		20X16BACKPLATE
TB 1	21		30A TERMINAL BLOCKS
TEMP CONTROL	1		UDC CONTROLLER
XF1, XF2	2		40VA TRANSFORMER
F1	1		FUSE HOLDERS
TCB	1		HOT GAS TEMPERATURE CONTROL
TEMP ALARM	1		TEMPERATURE ALARM
TEMP ALARM	1		LOW TEMP THERMISTOR
SW1	1		2 POS SWITCH
DC	1		DEFROST CLOCK
DR	1		DEFROST RELAY
CR1	1		CONTROL RELAY
ALM	1		ALARM RELAY

NOTES:

1. CONTACT USED FOR REMOTE ALARM.
2. CONTACT USED FOR DEFROST HEATER CONTROL, IF EQUIPPED.

UNIVERSITY OF CALIFORNIA, DAVIS

TYPICAL ENVIRONMENTAL ROOM - "REQUIRING DEFROST"

REVISION: 1		
SCALE: NONE	DATE: JULY 08	
DWN: KH CHK: VG	APPROVED	FILE NO. BR-02